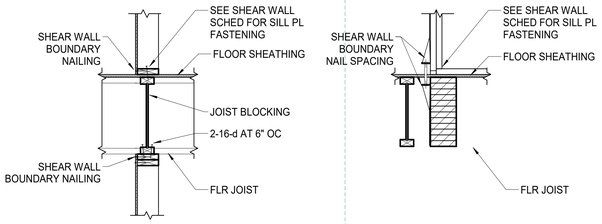

6 TYPICAL ELEVATED FLOOR HOLDOWN DETAIL (ALL)
3/4" = 1'-0"

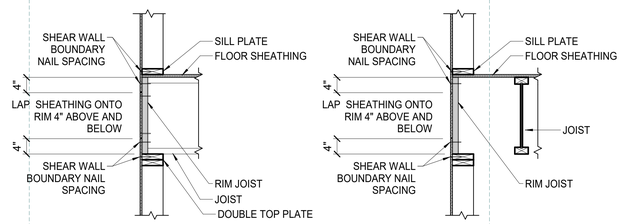

7 TYPICAL ELEVATED FLOOR HOLDOWN DETAIL (ALL)
3/4" = 1'-0"

HOLDOWN SCHEDULE

MARK	HOLDOWN	ANCHOR ROD		BOUNDARY POST SIZE	COMMENTS
		Diam.	Embed.		
HD2	SIMPSON HDU2	5/8"	6"	4x4 MIN.	SECURE HDU WITH (6) 1/4X1.5" SCREWS
HD4	SIMPSON HDU4	5/8"	6"	4x4 MIN.	SECURE HDU WITH (10) 1/4X1.5" SCREWS
HD5	SIMPSON HDU5	5/8"	6"	4x4 MIN.	SECURE HDU WITH (14) 1/4X1.5" SCREWS
CS20	SIMPSON 20 GA COILED STRAP				SECURE STRAP WITH (12) 0.148X2.5" FASTENERS
CS16	SIMPSON 16 GA COILED STRAP				SECURE STRAP WITH (20) 0.148X2.5" FASTENERS
CS14	SIMPSON 14 GA COILED STRAP				SECURE STRAP WITH (26) 0.148X2.5" FASTENERS

NOTES:
1. HOLDOWNS ARE SIMPSON STRONG-ITE OR EQUAL.
2. ANCHOR RODS SHALL BE GALVANIZED ASTM F1554 GRADE 36 HEADED BOLTS OR ASTM A36 THREADED ROD WITH DBL NUT AT BOTTOM.
3. ROD COUPLERS WITH 125% STRENGTH OF THE ROD MAY BE USED TO EXTEND RODS.
4. BOUNDARY POSTS ARE DF No. 1.

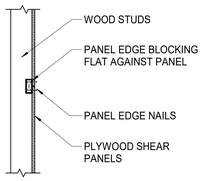

PANEL EDGE BLGK

5 PANEL EDGE BLOCKING
3/4" = 1'-0"

SPECIAL WOOD SHEAR WALL SCHEDULE

MODEL NUMBER	MANUFACTURER	BOTTOM PLATE ATTACHMENT		
		Fastener	Detail	Dia.
WSW12X12	SIMPSON	Anchor Rod	-	7/8"
WSW18X12	SIMPSON	Anchor Rod	-	7/8"
WSW24X12	SIMPSON	Anchor Rod	-	1"

NOTES:
1. SIMPSON STRONG WALLS SHALL BE INSTALLED PER MANUFACTURER'S INSTRUCTIONS.
2. ANCHOR RODS SHALL BE 18" ASTM F1554 GR 36 OR ASTM A307 THREADED ROD

WOOD SHEAR WALL SCHEDULE

MARK	LEVEL	WALL TYPE	No. OF SIDES	WOOD PANELS			NAIL SIZE	NAIL SPACING		PANEL JOINT STUDS	SILL OR BOTTOM PLATE ATTACHMENT					
				APA Grade	Thick.	Span rating		Edges	Field		Fastener	Detail	Dia.	Spacing	Embed.	Washer
A	1	SEGMENTED	1	Sheathing	3/8"	32/16	8d	6"	12"	2x	Anchor Rod	-	3/8"	32"	6"	DETAIL 6
B	1	SEGMENTED	1	Sheathing	3/8"	32/16	8d	6"	12"	2x	Anchor Rod	-	1/2"	32"	6"	DETAIL 6
C	1	SEGMENTED	1	Sheathing	3/8"	32/16	8d	4"	12"	2x	Anchor Rod	-	5/8"	32"	6"	DETAIL 6
D	1	SEGMENTED	2	Sheathing		32/16	8d	4"	12"	3x	Anchor Rod	-	3/4"	24"	6"	DETAIL 6
E	1	SEGMENTED	1	Sheathing	15/32"	32/16	8d	3"	12"	2x	Anchor Rod	-	3/4"	24"	6"	DETAIL 6
F	2	SEGMENTED	1	Sheathing	15/32"	32/16	8d	3"	12"	2x	Nails	-	(2) 16d	8"		
7	1	SEGMENTED	2	Sheathing	15/32"	32/16	8d	3"	12"	3x	Anchor Rod	-	3/4"	24"	6"	DETAIL 6

NOTES:
1. WOOD STRUCTURAL PANELS SHALL CONFORM TO THE REQUIREMENTS FOR ITS TYPE IN DOC PS1 OR PS2.
2. APPLY SHEATHING TO THE SIDE OF WALL INDICATED BY THE SYMBOL. PANELS MAY BE INSTALLED HORIZONTALLY OR VERTICALLY. DOUBLE SHEATHED WALLS SHALL HAVE PANELS APPLIED TO BOTH FACES.
3. ALL PANEL EDGES SHALL BE LOCATED ON STUDS, BLOCKING LAID FLAT, PLATES OR RIM JOISTS. WHERE SHEATHING IS APPLIED TO BOTH FACES OF WALL, OFFSET PANEL EDGES TO FALL ON DIFFERENT STUDS.
4. STAGGER PANEL EDGE NAILING AT PANEL JOINTS.
5. ANCHOR RODS SHALL BE HOT-DIPPED GALVANIZED ASTM A307 HEADED BOLTS. FIRST AND LAST ANCHORS SHALL BE LOCATED 6" FROM END OF EACH WALL SEGMENT OR END WALL HOLDOWN.
6. SEE TYPICAL PLATE WASHER DETAIL FOR SILL PLATE ANCHOR INSTALL AND LOCATION REQUIREMENTS.
7. SEE HOLDOWN SCHEDULE FOR HOLDOWNS AND BOUNDARY POST SIZES.
8. IN LIEU OF 3X PANEL EDGE STUDS, DBL 2x STUDS MAY BE USED. FASTEN DBL STUDS TOGETHER WITH 16d FACE NAILS STAGGERED @ 6" OC
9. ANCHOR ROD EMBEDMENT IS THE DISTANCE FROM TOP OF CONCRETE TO TOP OF NUT OR BOLT HEAD.

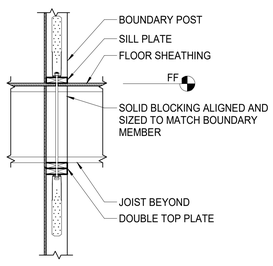

4 TYPICAL HOLDOWN ROD (INTERIOR WALLS)
3/4" = 1'-0"

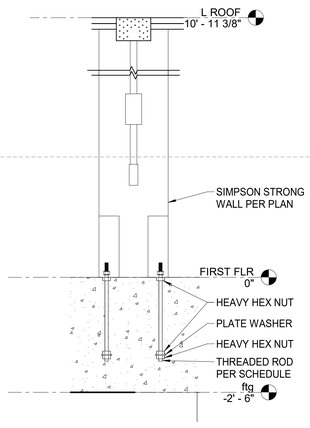

9 STRONG WALL ELEVATION
3/4" = 1'-0"

NOTES:
1. PANELS ARE SHOWN VERTICAL, BUT MAY BE PLACED HORIZONTAL.
2. MIN. EDGE DISTANCE FOR NAILS SHALL BE 3/8".
3. MIN. SHEATHING SHEET SIZE SHALL BE 2'-0"x4'-0".
4. NAILS SHALL NOT BE OVERDRIVEN.
5. NAILS SHALL BE COMMON WIRE TYPE OR APPROVED EQUAL.

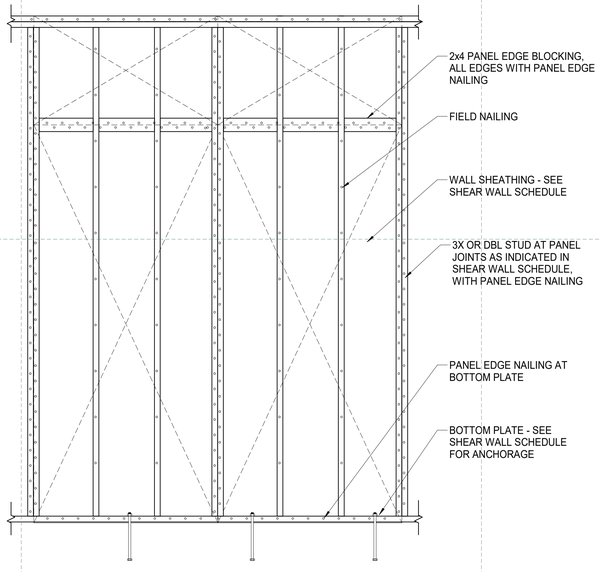

2 SHEAR WALL NAILING DETAIL
3/4" = 1'-0"

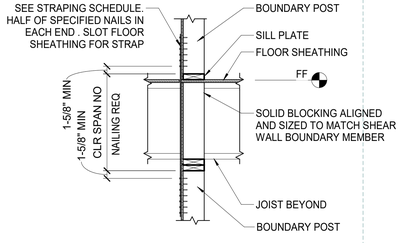

3 TYPICAL HOLDOWN STRAP DETAIL (INTERIOR WALLS)
3/4" = 1'-0"

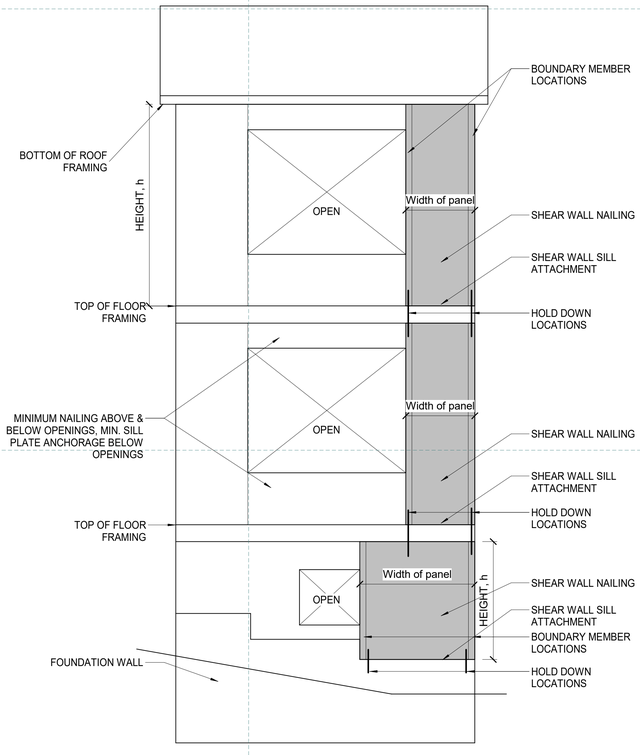

SEGMENTED SHEAR WALL

1 SHEAR WALL TYPES
3/4" = 1'-0"

NOT FOR FCONSTRUCTION

WANG CHEN RESIDENCE
DESIGN DEVELOPMENT
443 140TH AVENUE NE • BELLEVUE, WA 98006

PND ENGINEERS, INC.
1726 Fourth Avenue S., Suite A
Seattle, Washington 98134
P: 206.624.1307
www.pndengineers.com

BRODERICK ARCHITECTS
55 S. ATLANTIC STREET, SUITE #301
SEATTLE, WA 98134 206.682.7525

NO.	DATE	DESCRIPTION

DEDICATED APPROVAL STAMP SPACE

3/15/2021

WOOD PANEL SHEAR WALL SCHEDULES AND TYPICAL DETAILS

S1.5.2

This document represents a provisionary design owned by the architect and shall not be used on other projects or additions to this project or for completion of this project by others except by prior arrangement in writing. Copyright © Friday, June 24, 2016 by Broderick Architects, Inc.

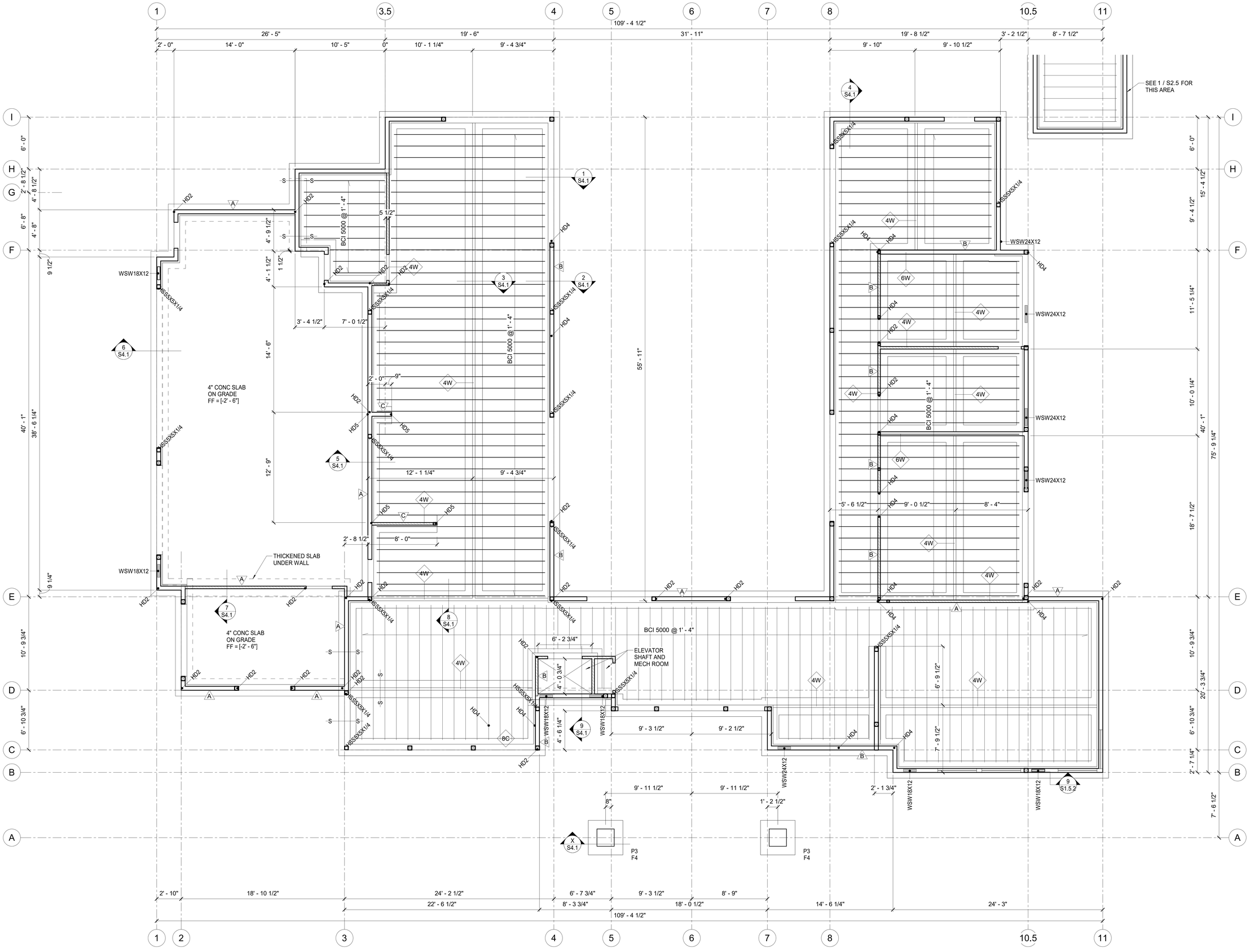

1 1. FIRST FLR FRAMING PLAN
1/4" = 1'-0"

NOT FOR FCONSTRUCTION

WANG CHEN RESIDENCE

DESIGN DEVELOPMENT

443 140TH AVENUE NE • BELLEVUE, WA 98006

PND ENGINEERS, INC.
1726 Fourth Avenue S., Suite A
Seattle, Washington 98134
P 206.682.7301
www.pndengineers.com

BRODERICK ARCHITECTS
55 S. ATLANTIC STREET, SUITE #301
SEATTLE, WA 98134 206.682.7525

NO.	DATE	DESCRIPTION

DEDICATED APPROVAL STAMP SPACE

3/15/2021

FOUNDATION PLAN

S2.0

This document represents a proprietary design owned by the architect and shall not be used on other projects or additions to this project or for completion of this project by others except by prior arrangement in writing. Copyright © Friday, June 24, 2016 by Broderick Architects, plc.

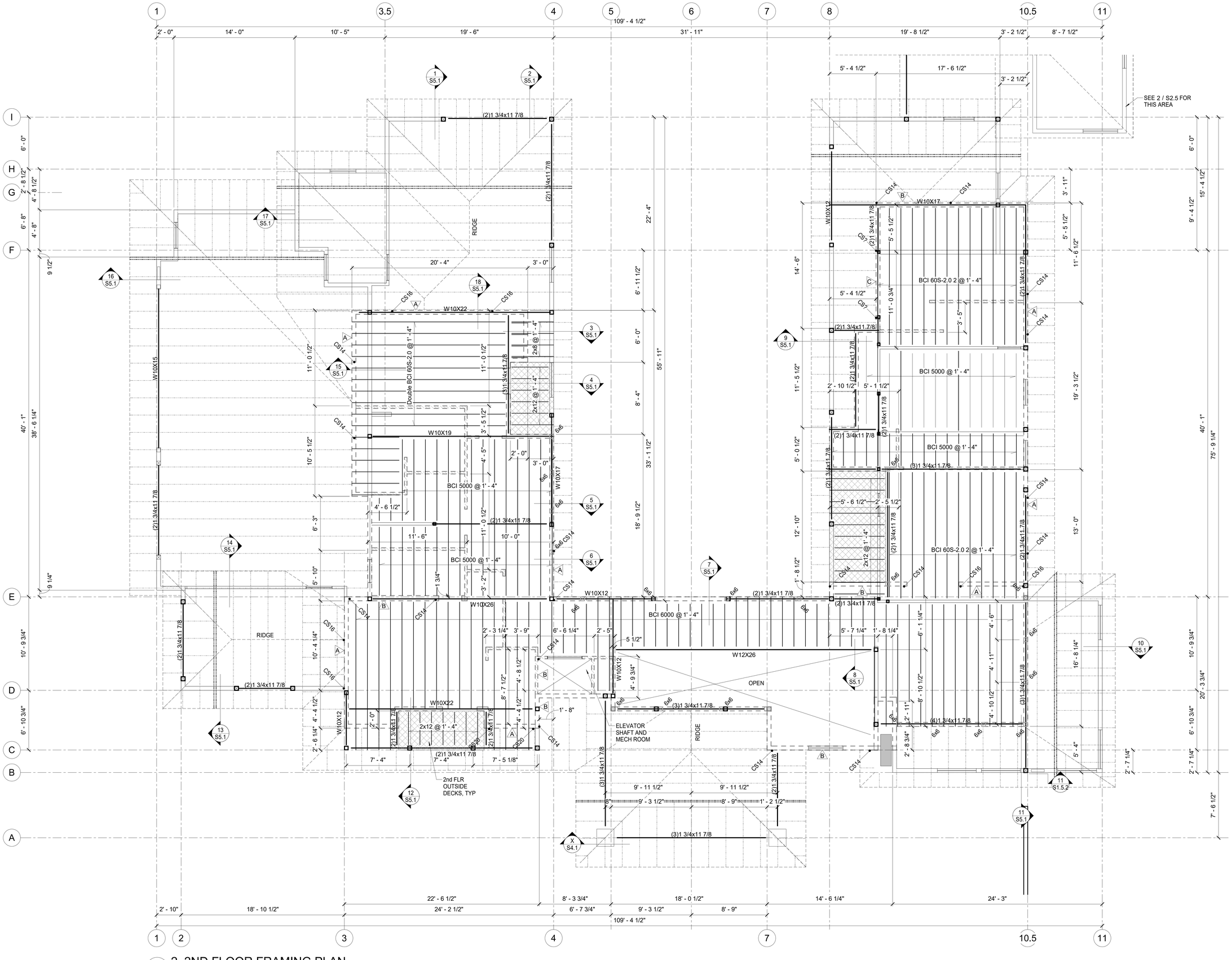

1 2. 2ND FLOOR FRAMING PLAN
1/4" = 1'-0"

NOT FOR FCONSTRUCTION

WANG CHEN RESIDENCE

DESIGN DEVELOPMENT

443 140TH AVENUE NE • BELLEVUE, WA 98006

BRODERICK ARCHITECTS
55 S. ATLANTIC STREET, SUITE #101
SEATTLE, WA 98134 206.682.7525

PND ENGINEERS, INC.
1750 Fourth Avenue S., Suite A
Seattle, Washington 98134
P: 206.324.3387
www.pndengineers.com

NO.	DATE	DESCRIPTION

DEDICATED APPROVAL STAMP SPACE

3/15/2021

2nd FLOOR FRAMING PLAN

S2.2

This document represents a proprietary design owned by the architect and shall not be used on other projects or additions to this project or for completion of this project by others except by prior arrangement in writing. Copyright © Friday, June 24, 2016 by Broderick Architects, plc.

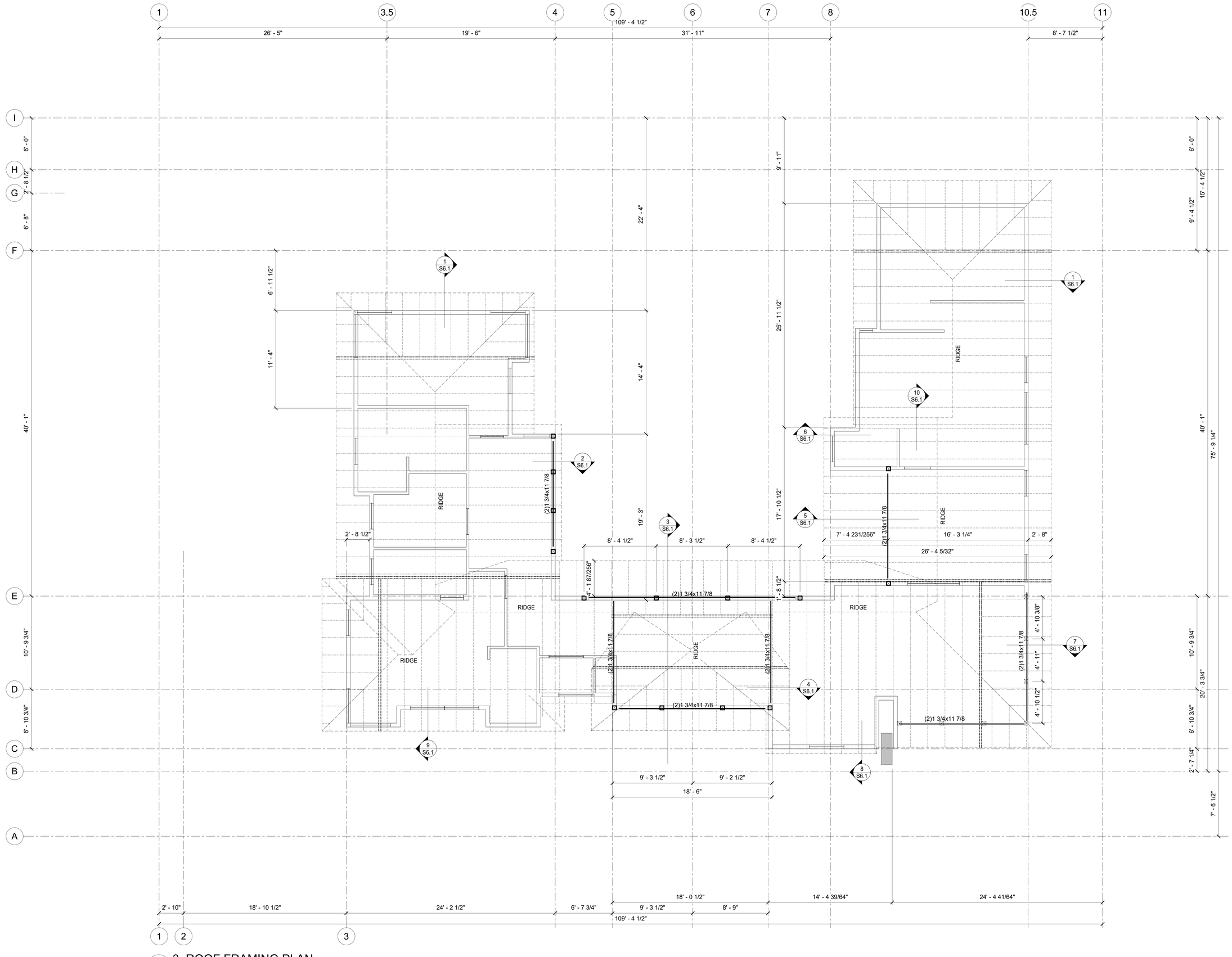

1 3. ROOF FRAMING PLAN
1/4" = 1'-0"

NOT FOR FCONSTRUCTION

WANG CHEN RESIDENCE

DESIGN DEVELOPMENT

443 140TH AVENUE NE • BELLEVUE, WA 98006

BRODERICK ARCHITECTS
55 S. ATLANTIC STREET, SUITE #301
SEATTLE, WA 98134 206.682.7925

PND ENGINEERS, INC.
1750 Fourth Avenue S., Suite A
Seattle, Washington 98134
P: 206.624.1387
www.pndengineers.com

NO.	DATE	DESCRIPTION

DEDICATED APPROVAL STAMP SPACE

3/15/2021

ROOF FRAMING PLAN

S2.3

This document represents a proprietary design owned by the architect and shall not be used on other projects or additions to this project or for completion of this project by others except by prior arrangement in writing. Copyright © Friday, June 24, 2016 by Broderick Architects, ofc.

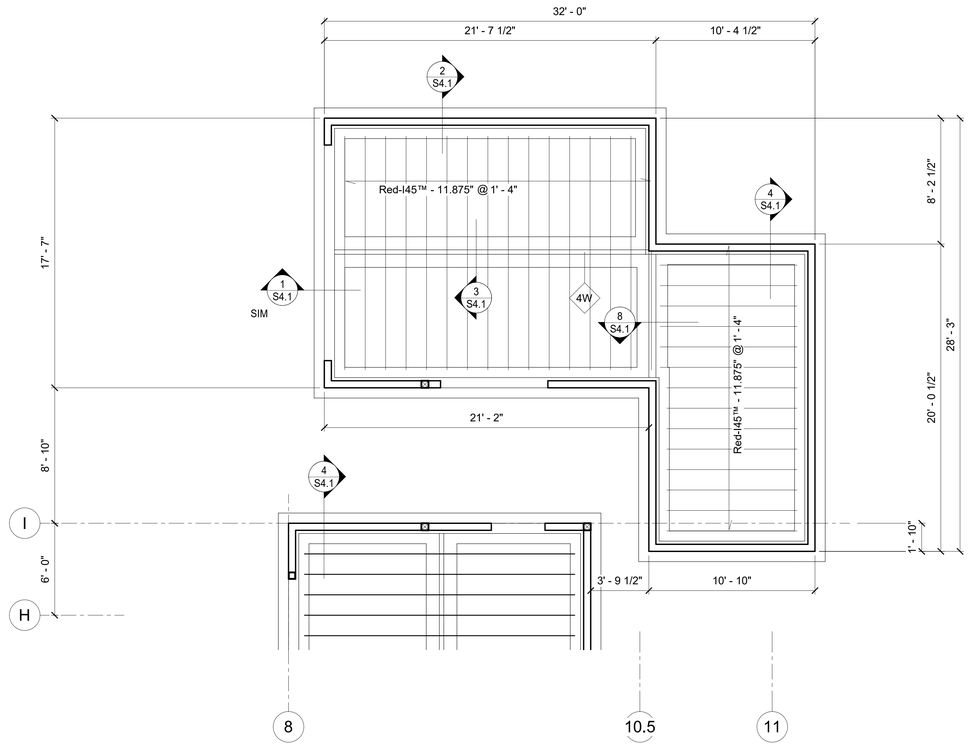

1 GUEST FLR FRAMING PLAN
1/4" = 1'-0"

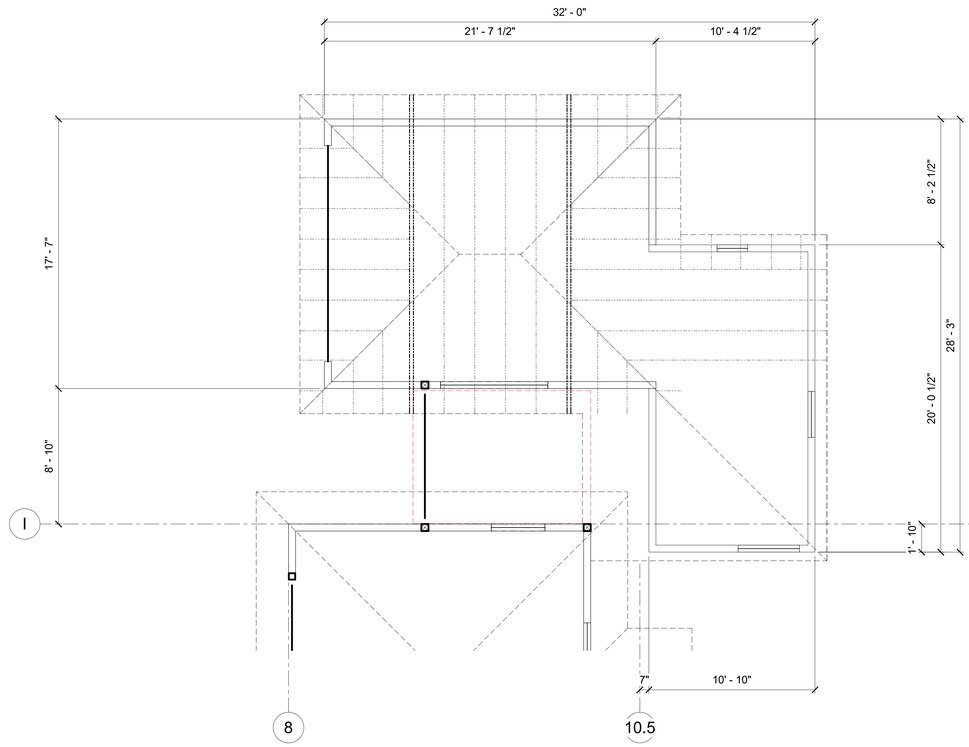

2 GUEST ROOF FRAMING PLAN
1/4" = 1'-0"

This document represents a proprietary design owned by the architect and shall not be used on other projects or additions to this project or for completion of this project by others except by prior arrangement in writing. Copyright © Friday, June 24, 2016 by Broderick Architects, pllc.

NOT FOR FCONSTRUCTION

WANG CHEN RESIDENCE
DESIGN DEVELOPMENT

443 140TH AVENUE NE • BELLEVUE, WA 98006

BRODERICK ARCHITECTS
55 S. ATLANTIC STREET, SUITE #101
SEATTLE, WA 98134 206.682.7525

PND ENGINEERS, INC.
1750 Fourth Avenue S., Suite A
Seattle, Washington 98134
P 206.682.1373
www.pndengineers.com

NO.	DATE	DESCRIPTION

DEDICATED APPROVAL STAMP SPACE

3/15/2021

GUEST HOUSE PLANS

S2.5

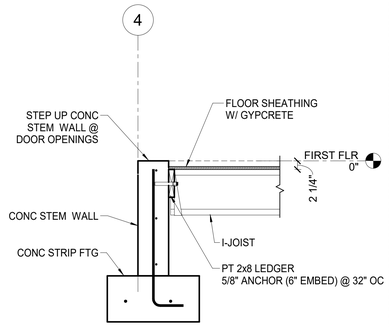

1 DETAIL
3/4" = 1'-0"

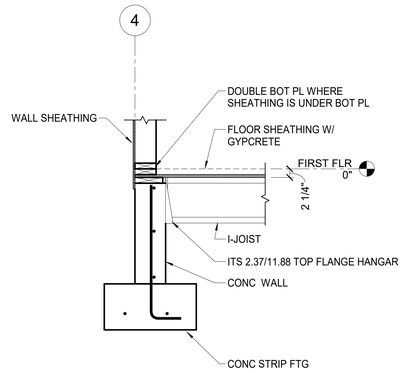

2 DETAIL
3/4" = 1'-0"

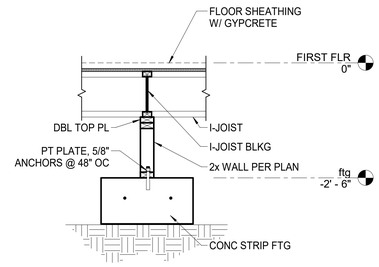

3 DETAIL
3/4" = 1'-0"

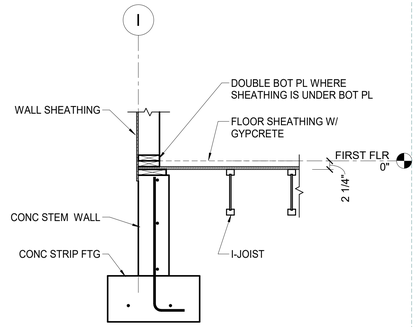

4 DETAIL
3/4" = 1'-0"

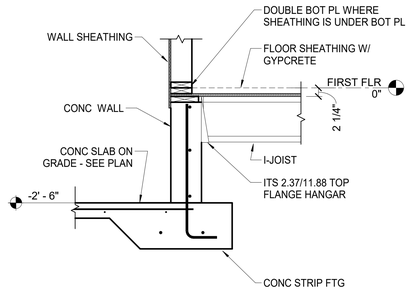

5 DETAIL
3/4" = 1'-0"

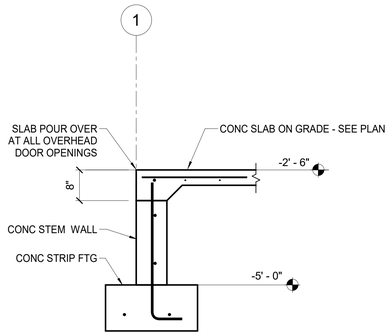

6 DETAIL
3/4" = 1'-0"

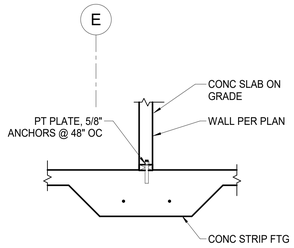

7 DETAIL
3/4" = 1'-0"

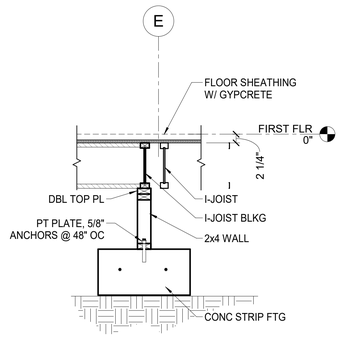

8 DETAIL
3/4" = 1'-0"

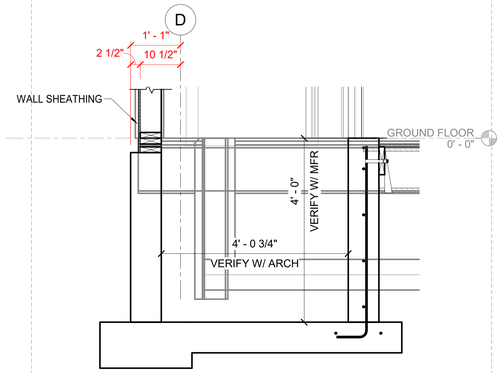

9 DETAIL
3/4" = 1'-0"

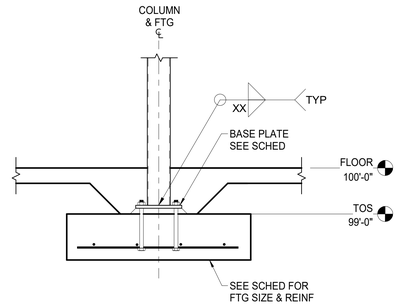

10 Typ Interior Column Footing Detail
3/4" = 1'-0"

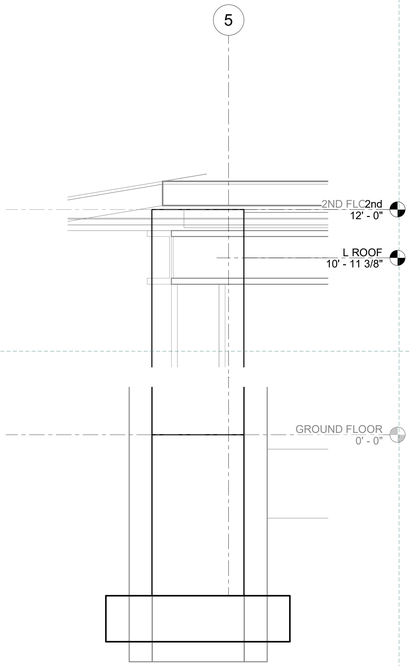

X DETAIL
3/4" = 1'-0"

NOT FOR FCONSTRUCTION

WANG CHEN RESIDENCE

DESIGN DEVELOPMENT

443 140TH AVENUE NE • BELLEVUE, WA 98006

BRODERICK ARCHITECTS
55 S. ATLANTIC STREET, SUITE #101
SEATTLE, WA 98134 206.682.7525

PND ENGINEERS, INC.
1750 Fourth Avenue S., Suite A
Seattle, Washington 98134
P 206.404.1973
www.pndengineers.com

NO.	DATE	DESCRIPTION

DEDICATED APPROVAL STAMP SPACE

3/15/2021

FOUNDATION DETAILS

S4.1

This document represents a proprietary design owned by the architect and shall not be used on other projects or additions to this project or for completion of this project by others except by prior arrangement in writing. Copyright © Friday, June 26, 2009 by Broderick Architects, ofc

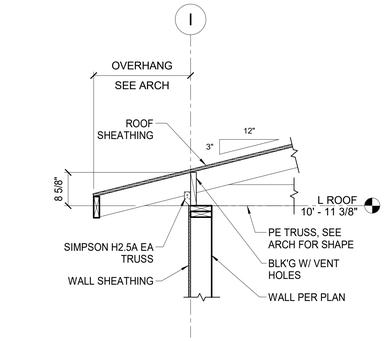

1 DETAIL
3/4" = 1'-0"

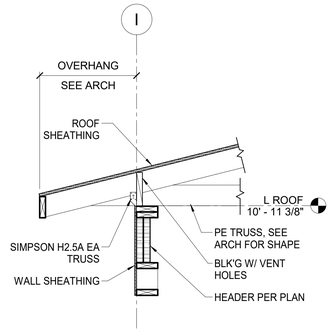

2 DETAIL
3/4" = 1'-0"

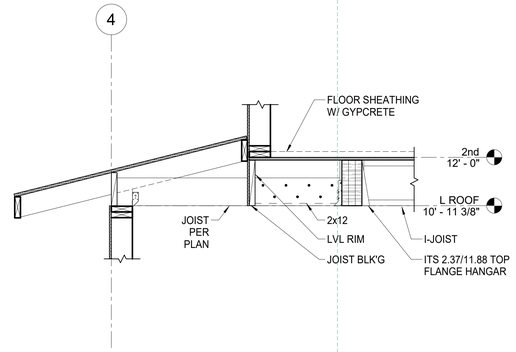

3 DETAIL
3/4" = 1'-0"

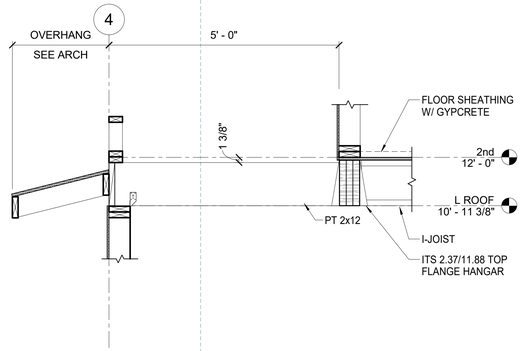

4 DETAIL
3/4" = 1'-0"

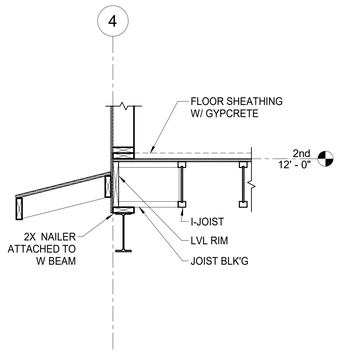

5 DETAIL
3/4" = 1'-0"

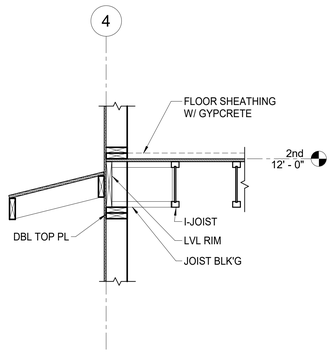

6 DETAIL
3/4" = 1'-0"

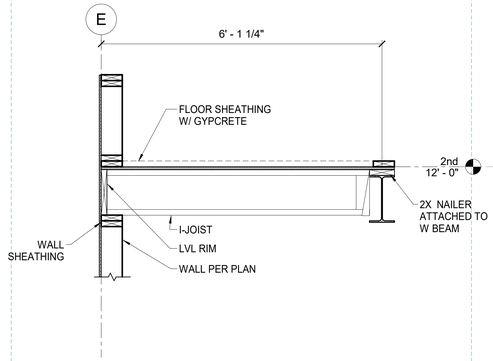

7 DETAIL
3/4" = 1'-0"

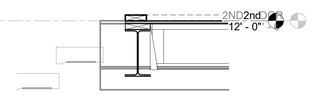

8 DETAIL
3/4" = 1'-0"

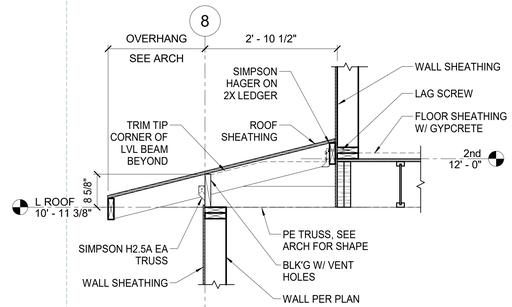

9 DETAIL
3/4" = 1'-0"

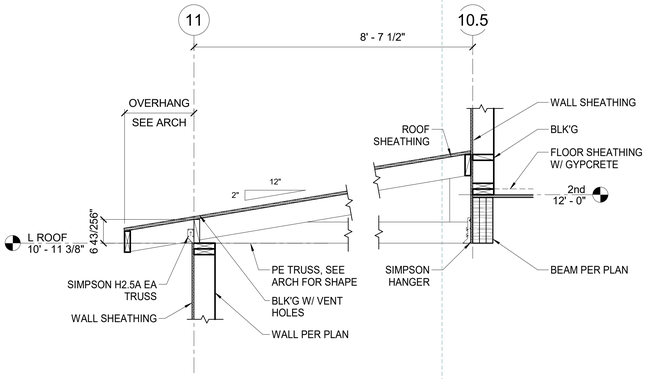

10 DETAIL
3/4" = 1'-0"

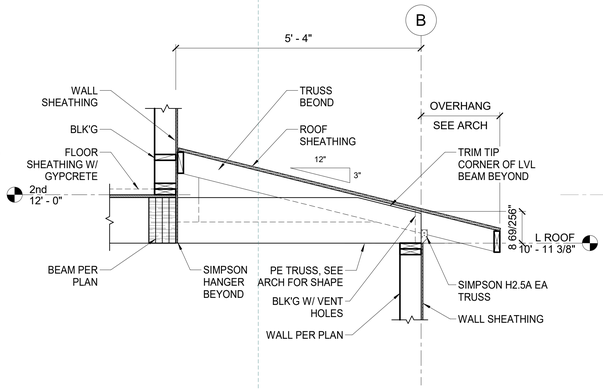

11 DETAIL
3/4" = 1'-0"

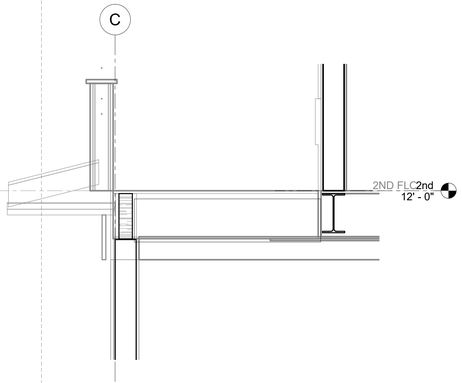

12 DETAIL
3/4" = 1'-0"

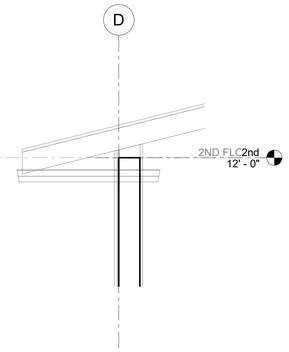

13 DETAIL
3/4" = 1'-0"

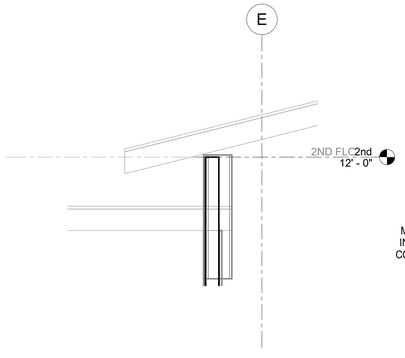

14 DETAIL
3/4" = 1'-0"

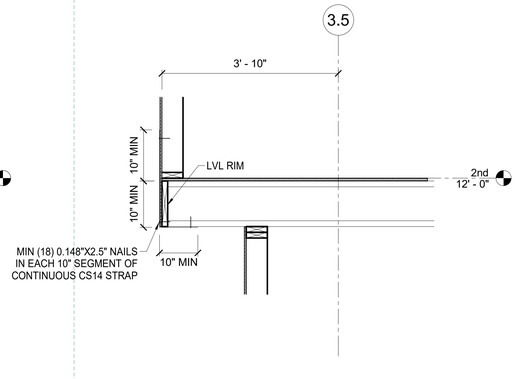

15 DETAIL
3/4" = 1'-0"

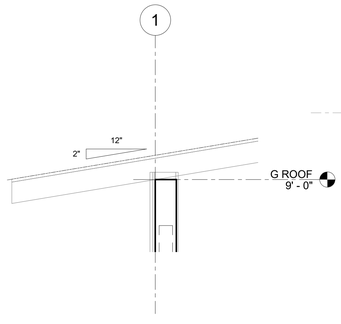

16 DETAIL
3/4" = 1'-0"

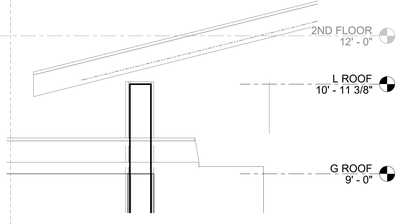

17 DETAIL
3/4" = 1'-0"

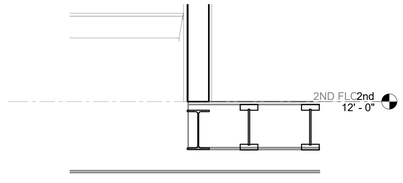

18 DETAIL
3/4" = 1'-0"

NOT FOR FCONSTRUCTION

WANG CHEN RESIDENCE

DESIGN DEVELOPMENT

443 140TH AVENUE NE • BELLEVUE, WA 98006

1726 Fourth Avenue S., Suite A
Seattle, Washington 98134
P 206.682.7321
www.pnengineers.com
PND ENGINEERS, INC.

BRODERICK ARCHITECTS
55 S. ATLANTIC STREET, SUITE #301
SEATTLE WA 98134 206.682.7525

NO.	DATE	DESCRIPTION

DEDICATED APPROVAL STAMP SPACE

3/15/2021

FRAMING DETAILS

S5.1

This document represents a proprietary design owned by the architect and shall not be used on other projects or additions to this project or for completion of this project by others except by prior arrangement in writing. Copyright © Friday, June 24, 2016 by Broderick Architects, Ltd.

SINGLE SHEAR PLATE CONNECTION SCHEDULE

BEAM SIZE	BOLT DIA.	No. OF BOLTS	HOLE TYPE	PLATE LENGTH	PLATE THICK.	FILLET WELD SIZE (WS)	CAPACITY (kips)	
							ASD	LRFD
W8's	7/8"	2	STD	5 1/2"	1/4"	3/16"	16.3	24.5
W10's	7/8'	2	STD	5 1/2"	1/4"	3/16"	16.3	24.5
W12's	7/8"	3	STD	9"	1/4"	3/16"	26.1	39.2
W14's	7/8"	3	STD	9"	1/4"	3/16"	26.1	39.2

NOTES:

1. JOINT TYPE: ALL BOLTED CONNECTIONS AT SINGLE SHEAR PLATES ARE PRETENSIONED JOINTS.
2. USE SINGLE SHEAR PLATE CONNECTIONS AT ALL BEAM TO COLUMN CONNECTIONS EXCEPT COLLECTORS AND BRACED FRAME CONNECTIONS.
3. USE SINGLE SHEAR PLATE CONNECTIONS AT ALL BEAM TO GIRDER CONNECTIONS.
4. SHEAR PLATE Fy = 36 ksi
5. ALL BOLTS FOR SHEAR PLATE CONNECTIONS ARE GROUP A, ASTM A325 TYPE N, UNO. REFER TO THE SPECIFICATION FOR TIGHTENING AND TESTING PROCEDURES.
6. PL WIDTH IS AS SHOWN IN THE TYP DETAILS.
7. BOLT PITCH = 3". VERTICAL EDGE DISTANCE (Lev) IS 1 1/2". HORIZONTAL EDGE DISTANCE (Leh) IS 2x BOLT DIAMETER OR A MIN. OF 2". DISTANCE FROM COLUMN TO BOLT IS 3".
8. USE E70XX ELECTRODES.
9. BOLT HOLES IN SINGLE SHEAR PLATES SHALL BE STANDARD HOLES UNO.

COLLECTOR CONNECTION SCHEDULE

BEAM SIZE	BOLT DIA.	No. OF BOLTS	HOLE TYPE	PLATE LENGTH	PLATE THICK.	FILLET WELD SIZE (WS)
W12's	7/8"	6	STD	9"	1/4"	3/16"
W14's	7/8"	6	STD	9"	1/4"	3/16"
W16's	7/8"	8	STD	12"	7/16"	1/4"
W18's	7/8"	10	STD	15"	7/16"	1/4"
W21's	1 1/8"	10	STD	16"	1/2"	5/16"
W24's	1 1/8"	12	STD	19"	1/2"	5/16"
W27's	1 1/8"	14	STD	22"	1/2"	5/16"
W30's	1 1/8"	16	STD	25"	1/2"	5/16"
W36's	1 1/8"	20	STD	31"	1/2"	5/16"

NOTES:

1. JOINT TYPE: ALL BOLTED CONNECTIONS FOR COLLECTORS ARE PRETENSIONED JOINTS WITH CLASS A SURFACE PREPARATION ON ALL FAYING SURFACES.
2. SHEAR PLATE Fy = 36 ksi
3. ALL BOLTS FOR SHEAR PLATE CONNECTIONS ARE GROUP A, ASTM A325 TYPE N, UNO. REFER TO THE SPECIFICATION FOR TIGHTENING AND TESTING PROCEDURES.
4. USE E70XX ELECTRODES.
5. BOLT HOLES IN SINGLE SHEAR PLATES SHALL BE STANDARD HOLES UNO.
6. PL WIDTH IS SHOWN IN THE TYP. DETAILS.
7. BOLT PITCH =3". VERTICAL EDGE DISTANCE (Lev) IS 1 1/2". HORIZONTAL EDGE DISTANCE (Leh) IS 2x BOLT DIAMETER OR A MIN. OF 2". DISTANCE FROM FACE OF COLUMN TO FIRST BOLT LINE IS 3".

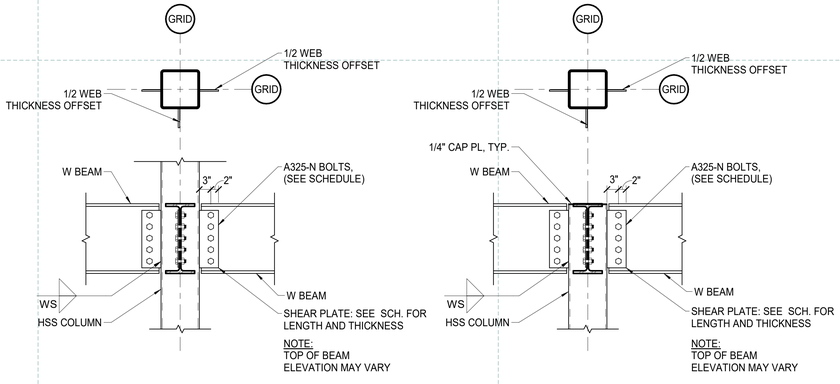

2 TYPICAL BEAM TO HSS COLUMN CONNECTIONS
3/4" = 1'-0"

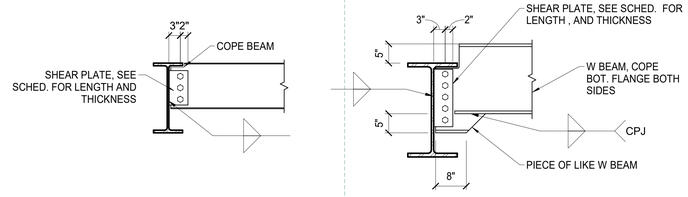

3 TYPICAL BEAM TO GIRDER CONNECTION
3/4" = 1'-0"

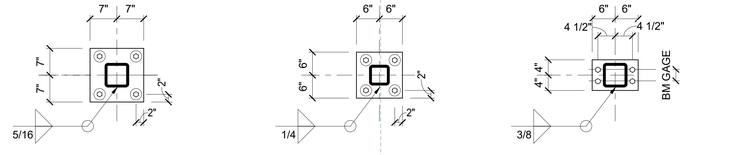

BPX	HSS6x6 COL
t =1"	BOT. OF BASE PL EL= 99'-1 1/2"
ANCHOR RODS = 4-1"ø w/ 12" EMBED	

BPX	HSS5x5 COL
t =3/4"	BOT. OF BASE PL EL= 99'-1 1/2"
ANCHOR RODS = 4-3/4"ø w/ 12" EMBED	

BPX	BEAM SUPPORTED COL
t =1"	BOT. OF BASE PL EL VARIES
BASE PL BOLTS = 5/8"ø A 325"	

1 Base Plates - HSS Col
3/4" = 1'-0"

NOT FOR FCONSTRUCTION

WANG CHEN RESIDENCE
DESIGN DEVELOPMENT

443 140TH AVENUE NE • BELLEVUE, WA 98006

BRODERICK ARCHITECTS
55 S. ATLANTIC STREET, SUITE #301
SEATTLE, WA 98134 206.682.7525

PND ENGINEERS, INC.
1726 Fourth Avenue S., Suite A
Seattle, Washington 98134
P 206.624.1301
www.pndengineers.com

NO.	DATE	DESCRIPTION

DEDICATED APPROVAL STAMP SPACE

3/15/2021

STEEL FRAMING DETAILS

S5.2

This document represents a proprietary design owned by the architect and shall not be used on other projects or additions to the project or for completion of the project by others except by prior arrangement in writing. Copyright © Friday, June 24, 2016 by Broderick Architects, Inc.

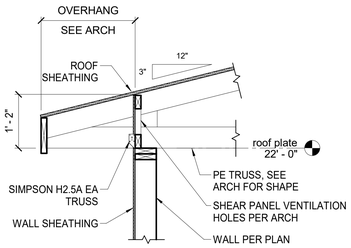

1 DETAIL
3/4" = 1'-0"

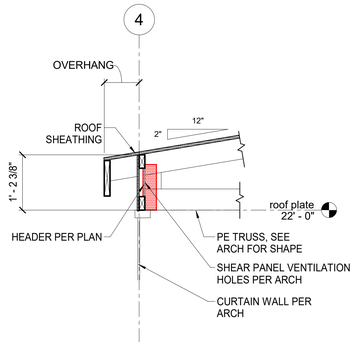

2 DETAIL
3/4" = 1'-0"

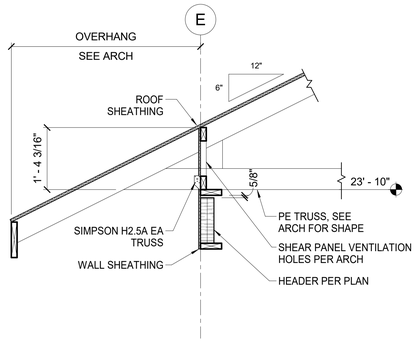

3 DETAIL
3/4" = 1'-0"

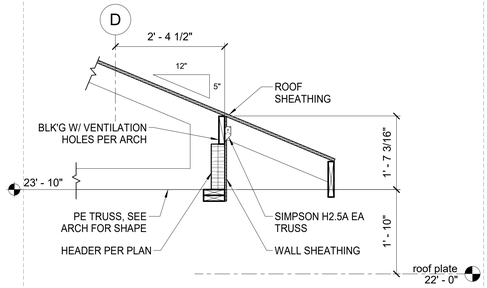

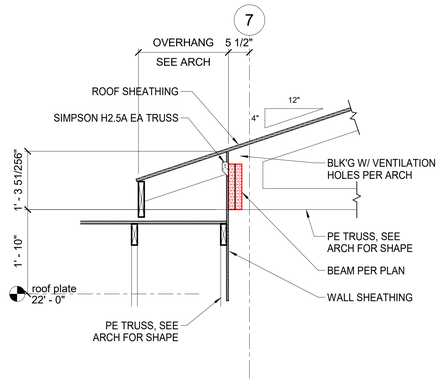

4 DETAIL
3/4" = 1'-0"

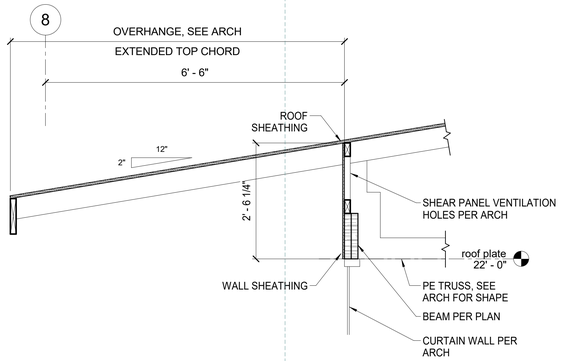

5 DETAIL
3/4" = 1'-0"

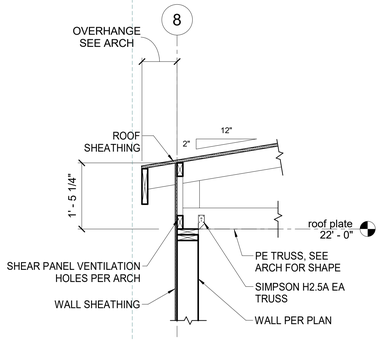

6 DETAIL
3/4" = 1'-0"

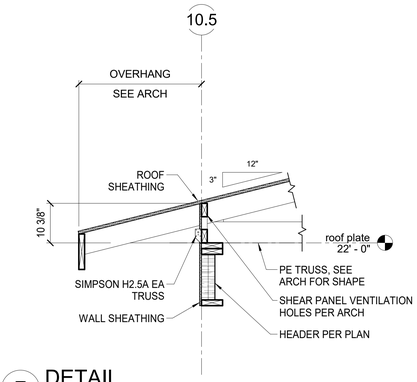

7 DETAIL
3/4" = 1'-0"

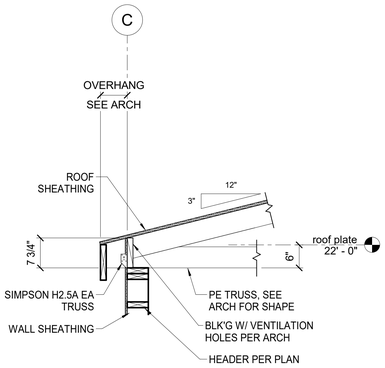

8 DETAIL
3/4" = 1'-0"

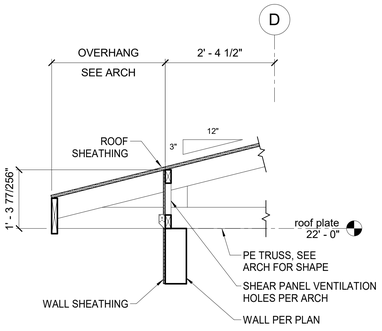

9 DETAIL
3/4" = 1'-0"

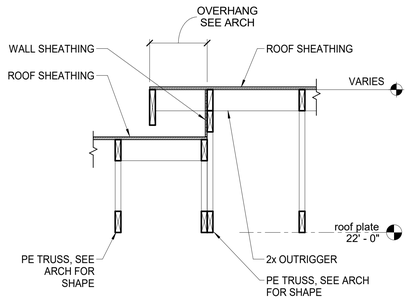

10 DETAIL
3/4" = 1'-0"

NOT FOR FCONSTRUCTION

WANG CHEN RESIDENCE

DESIGN DEVELOPMENT

443 140TH AVENUE NE • BELLEVUE, WA 98006

PND ENGINEERS, INC.
1726 Fourth Avenue S., Suite A
Seattle, Washington 98134
P 206.624.1307
www.pndengineers.com

BRODERICK ARCHITECTS
55 S. ATLANTIC STREET, SUITE #301
SEATTLE WA 98134 206.682.7525

NO.	DATE	DESCRIPTION

DEDICATED APPROVAL STAMP SPACE

3/15/2021

ROOF FRAMING DETAILS

S6.1

This document represents a proprietary design owned by the architect and shall not be used on other projects or additions to this project or for completion of this project by others except by prior arrangement in writing. Copyright © Friday, June 26, 2009 by Broderick Architects, Inc.